ANELLO
PD12722

PENDANTS

PROJECT

DESCRIPTION

This sophisticated unparalleled designed LED pendant is one of a kind masterpiece. From each viewable angle you will perceive a different architectural look, with three layers of eccentric arched metal bands combined together. Inside each band is our powerful 120V AC LED technology diffused by inner frosted acrylic curved diffusers, when lit the light illuminates elegantly throughout all the inner bands and into the surrounding area. Available in white metal finish.

PD12722-WH
White

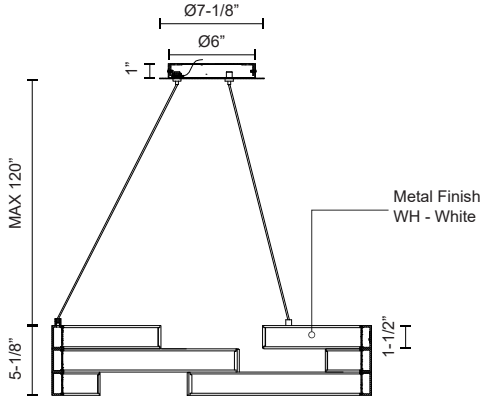

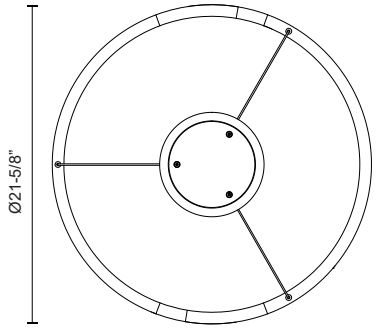

SPECIFICATION DETAILS

* For custom options, consult factory for details.

Fixture Dimensions	D21-5/8" x H5-1/8"
Light Source	AC LED Module
Wattage	95W
Total Lumens	7200lm
Delivered Lumens	WH-4048lm
Voltage	120V
Color Temperature	3000K
CRI (Ra)	90CRI
Optional Color Temps	2700K - 5000K Available, Minimum Order Quantities Apply
LED Rated Life	50,000 hours
Dimming	100% - 10%, ELV Dimmer (Not Included)
Diffuser Details	White Acrylic Diffuser
Adjustable	Yes
Wire Length	120" Max
Wire Type	Clear SSL Wire
Location	Dry
Warranty	5 Years
Canopy Dimensions	D7-1/8" x H1"

KUZCO

19054 28TH AVENUE
SURREY - BC V3Z 6M3
CANADA

WWW.KUZCOLIGHTING.COM

COMMENT

Intertek